QUARTER-TURN ELECTRIC ACTUATOR

J4C 20

Compact multi-voltage electric actuator

A compact quarter-turn electric actuator in anticorrosive polyamide housing with brushless 24 VDC motor, visual position indicator, manual override and four limit switches.

- Anticorrosive polyamide housing
- Brushless motor, class B insulation
- IP67 to IEC 60529
- Automatic heater 3.5 W
- EN 175301-803 & DIN 43650/C plugs



20 Nm	9 s	IP67	0–270°
MAX. OPERATING TORQUE	PER 90° UNLOADED	IEC 60529	MAX. WORKING ANGLE

Models.

SAME MECHANICS, CHOICE OF SUPPLY

Model	S20	B20	H20
Voltage	24-240 VAC / 24-135 VDC	12 VDC/VAC only	85-240 VAC/VDC
Operation time unload	9 s/90°		
Maximum torque break	25 Nm / 221 lb·in		
Maximum operational torque	20 Nm / 177 lb·in		
Duty rating	75 %		

OPTIONS

- **J4C 20/85 kit DPS digital positioner: 4-20 mA, 0-20 mA, 0-10 V or 1-10 V**
- J4C 20/85 kit BSR battery emergency fail-safe: NC - NO
- Potentiometer 1K, 5K or 10K
- 3-position actuator 0°-45°-90° or 0°-90°-180°

ISO 5211
Standard F03/F04/F05 · optional F07 *17 mm

OUTPUT DRIVE
DIN 3337 female Standard *14 · optional *9, *11 mm

PROTECTION
IP67 (IEC 60529)

SUPPLIED & SUPPORTED IN THE UK BY
Actuation Valve & Control Ltd
actuation.co.uk

Technical data.

Operation time unload	9 s/90°
Maximum torque break	25 Nm / 221 lb·in
Maximum operational torque	20 Nm / 177 lb·in
Duty rating	75 %
Max. working angle	0° to 270°
Limit switch	4 SPST NO micro (2 motor stop and 2 confirmations)
Automatic heater	3.5 W
Big plug	EN 175301-803 form A
Small plug	DIN 43650/C
Protection IEC 60529	IP67
Temperature	-20 °C +70 °C / -4 °F +158 °F
Weight	1.8 kg

General characteristics.

Housing	Anticorrosive polyamide (lid & body)
Main external shaft	Anticorrosive polyamide
External screws	Stainless steel
Gears	Steel and polyamide
Visual position indicator	Polyamide
Dome	Polycarbonate
Adjustable internal cams	Polyamide
Electric motor	24 VDC brushless motor
Insulation	Class B
Service (IEC 60034)	S4

Valve connection.

ISO 5211 plate	Standard F03/F04/F05 · optional F07 *17 mm
DIN 3337 female output drive	Standard *14 · optional *9, *11 mm

Dimensions.

MM / INCH

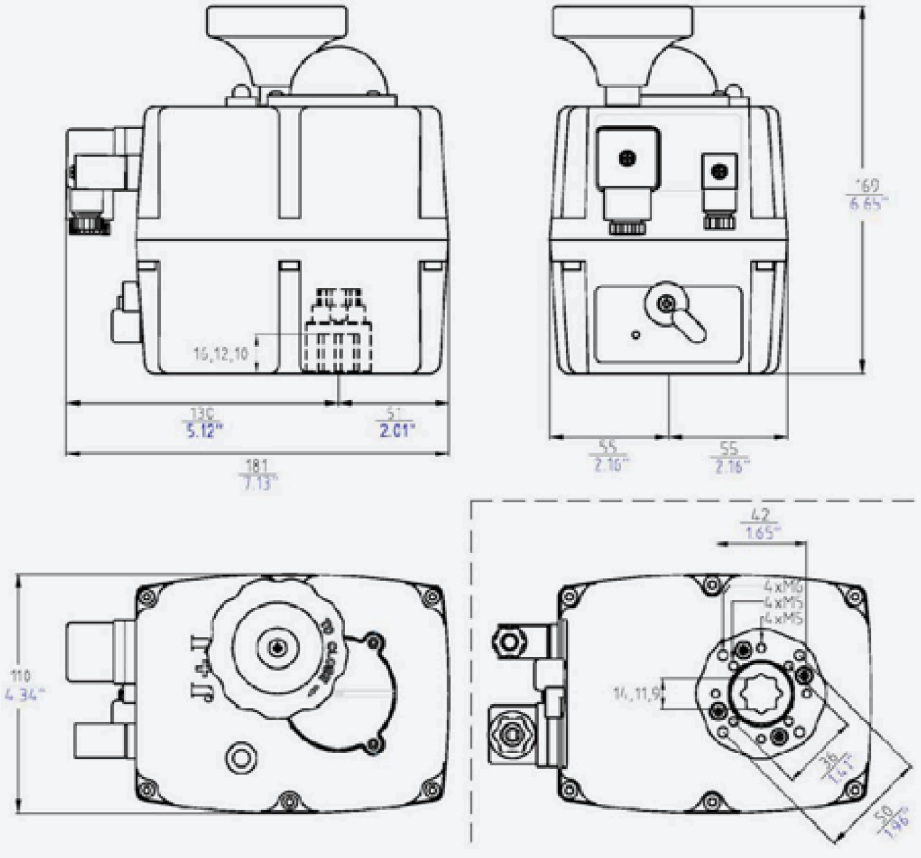

Data supplied by J+J Automation and provided for reference only. Specifications may change without notice – please confirm details with Actuation Valve & Control before ordering.

Automating a quarter-turn valve?
Talk to our UK team about J+J J4C actuators, DPS positioners and BSR battery fail-safe kits.
actuation.co.uk